Assessment of Iran's Nuclear and Missile Potential

Siddharth R. Soni

This page is dedicated to the
hope of total nuclear disarmament.

TABLE OF CONTENTS

Important: Note from the Author –

Even as the agenda says 'Assessment of Iran's Nuclear and Missile Potential' we must be aware that Iran's missile potential or the proliferation of ballistic missiles for use with conventional weapons is an aspect of general disarmament concern which is not pursuant to discussions under any paragraph of the statue of IAEA.

Therefore, representatives must bear in mind at all times that Iran's missile potential is of little interest to IAEA, only because of its nature as a carrier of nuclear ordnance. The debate is expected to be focused on the nuclear potential of Iran.

~1~

Introduction

Iran's nuclear policy has been in a gorge of debate for over two decades, and since the revolution, found itself in the interior of both international political speculation and the blame of nuclear proliferation while often being seen as a catalyst for removing the balance of the Middle East and a threat to international peace and security. However, the world view on Iranian nuclear policy is not undivided but extremely diverse and conflicting.

International Atomic Energy Agency[1] is United Nations' and the world's leading nuclear watchdog which notes and observes international nuclear development and is entrusted with the role of preventing nuclear weaponization. IAEA is a technical, not body and therefore, it is essential to understand the role of representatives at IAEA since the nature of debate and discussions is also scientific over political. It borrows its share of deliberation from international politics, scientific study and technical inspection of nuclear plants and enrichment levels. It is widely known now, that even, IAEA's views on Iranian nuclear programme have been very evolutionary.

Uranium[2], the chief element of a nuclear reactor fuel is a notoriously dual-use element and it is especially easy for any country with some technical know-how to make a nuclear

---

[1] International Atomic Energy Agency, Official Website: http://www.iaea.org/ (Retrieved 21 January 2013)

[2] Uranium, U92, Standard Atomic Weight: 238.02891(3), Radioactive, Most Stable Isotope: U238 (146N)

weapon from enriching uranium for peaceful purposes, and in a dangerously discreet manner. After the World Wars, many countries of the world believe in safeguarding nuclear technology documentation and preventing further development of nuclear weapons, at the same time, disarming them too within their own nuclear arsenal. Uranium is a great source of clean energy and United Nations, IAEA and many inter-governmental organizations are buoying up the use of nuclear fuel for medical research and clean energy. The exceptions in the past have met with unfavourable circumstances, as development of Weapons of Mass Destruction[3] is against law and international indulgence at many levels.

This document is an elementary study of Iranian nuclear programme and policy, and is written and compiled to serve as a very basic reading.

MANDATE OF THE IAEA GENERAL CONFERENCE

General Conference is the highest and the only policy-making body of the International Atomic Energy Agency and is composed of representatives of all member states of the agency. The General Conference is an annual meeting and considers and approves the programme for agency's yearlong work, often including critical decisions on the matters brought before it by the Board of Governors, Director General or individually by member states.

The functions of the General Conference is identical to that of the General Assembly of the United Nations in a way that it serves chiefly as the forum of broad debate on current issues and policies. The agenda for the General Conference can be tabled by the office of the Director General or the Board of Governors, and usually requires a simple majority to pass a resolution document upon, unless the simple majority decides that the agenda is an *additional question* and a substantive majority would be required to pass it.

The General Conference is also responsible for appointment of the Director General, the head of the Secretarial Staff of the IAEA for a renewable 4 year term. The current session will not concern itself with this responsibility of appointment of Director General and the Director General will remain absent from the meeting.

---

[3] The most widely used definition of "weapons of mass destruction" is that of nuclear, biological, or chemical weapons (NBC) although there is no treaty or customary international law that contains an authoritative definition. Instead, international law has been used with respect to the specific categories of weapons within WMD, and not to WMD as a whole.

PROTOCOL OF THE MEETING

The meeting will follow the general Model United Nations rules of procedure for the benefit of debate, and familiarity from the perspective of newcomers, but the following will be the added protocol elements in the procedure;

Motion to Propose an Additional Question

In case the agenda concerns itself with any decision pursuant to paragraph H of article XIV, paragraph C of article XVIII and paragraph B of article XIX of the statute of the IAEA, the delegate can raise this motion, to ensure that any decision pursuant to the agenda *i.e. Iran's Nuclear and Missile Potential* passes through only 2/3rd majority rather than a simple majority required by the General Conference under ordinary circumstances. This motion requires a simple majority of the General Conference to pass.

Point of Observation

A delegate may rise to a Point of Observation after any speech and upon being recognized by the President; express his observation on the speech of another delegate. A Point of Observation is raised when the delegate requires written/ documented proof of the statement made by another delegate.

Plea for Explanation of Vote

A delegate may rise to a Plea for Explanation of Vote after a substantive vote recorded on a resolution/ amendment/ proposal and this plea may be denied by the President.

~

~2~

Iran's Nuclear Programme

Iran's nuclear program refers to Iran's active battery of nuclear facilities and nuclear know-how, regarding both nuclear weapons and nuclear energy for peaceful purposes. Iran's nuclear program has been associated with ambiguity and unwillingness of inspection, and while Iran had constantly denied their intent of making nuclear weapons, many nations of the world have associated this ambiguity with atomic research only required for making nuclear weapons.

Nuclear Proliferation[4] or the spread of nuclear weapons or technology, fissile material and other related information regarding manufacturing them by nations not recognized as 'nuclear weapon states' by the Nuclear Non Proliferation Treaty is considered illegal by the countries party to the NPT, and Iran's nuclear programme has constantly been a subject of non-compliance. Israel, Pakistan and India[5] also have been understood to possess nuclear weapons, where India and Pakistan has accepted, but none of these three nations have signed or ratified the international treaty and therefore can't be legally held by it. India, Pakistan and Israel have also constantly been criticized for nuclear proliferation, but do not match Iran's level of ambiguity in disclosing their nuclear and

---

[4] Nuclear Files.org Comprehensive information regarding nuclear proliferation, including case studies.

[5] North Korea is another nation who was previously a party to NPT but withdrew in 2003 citing United States of America's non compliance to many of their mutual agreements.

missile assets. As a matter of fact, the bulk of controversy associated with Iranian Nuclear Programme is borrowed from Iran's reluctance to share sensitive enrichment and reprocessing activities to the International Atomic Energy Agency. The following section explains upon Iran's nuclear policy and known/alleged/plausible nuclear assets.

EARLY STAGES OF IRAN'S NUCLEAR PROGRAMME

Iran's nuclear programme began as the first nuclear program in Middle East, with Eisenhower's *Atoms for Peace* Programme. In 1967, Atomic Energy Agency of Iran was established and the Tehran Nuclear Research Project, started with the aid of the United States of America's 5 MW nuclear reactor already equipped with enriched uranium.[6] In 1968, Iran signed the Nuclear Non-Proliferation Treaty, and ratified it two years later.

Iran's Nuclear Programme before the revolution was civilian, and a quite elaborate one, and the Shahs proclaimed in 1974, that he intended to build more than 20 high profile reactors by 2000 to power all of Iran because one day the world's petroleum will come to an end. But the revolution changed, drastically, the nature of this nuclear programme.

Following the Iranian revolution, most of the countries cooperating with Iran in terms of nuclear know-how and fuel supply changed to non-cooperative standards, and denounced and feared the change of Iran's nuclear policy. One of the major consequences of Iranian revolution was that Iran was not supplied with nuclear fuel anymore, and Iran's indigenous nuclear assets were too insufficient to enrich Uranium. This changed when Argentina helped Iran set up the Tehran Nuclear Research facility, which could enrich uranium to the requisite level from low-enriched Uranium, supplied by Argentina via a mutual agreement.[7]

In 1981, Iranian governmental officials concluded that the country's nuclear development should continue. Reports to the IAEA included that a site at Esfahan Nuclear Technology Center (ENTEC) would act "as the center for the transfer and development of nuclear technology, as well as contribute to the

---

[6] The maximum enrichment level required for civilian nuclear purposes of Uranium is 5 percent, consistent with IAEA safeguards.

[7] "Amendment to Agreement between the International Atomic Energy Agency and the Government of Iran for assistance by the Agency to Iran in establishing a Research Reactor Project". IAEA (United Nations). 9 December 1988. Retrieved 8 April 2010; http://treaties.un.org/doc/Publication/UNTS/Volume%201562/volume-1562-I-8865-English.pdf (Retrieved 25 January 2013)

formation of local expertise and manpower needed to sustain a very ambitious program in the field of nuclear power reactor technology and fuel cycle technology." The IAEA also was informed about Entec's largest department, for materials testing, which was responsible for UO_2 pellet fuel fabrication and a chemical department whose goal was the conversion of U_3O_8 to nuclear grade UO_2.

Persepolis

Iran's collaboration with Russia, even after the revolution was remarkable, and the seeds of this collaboration resulted in a comprehensive nuclear technology sharing project called *Persepolis* that scholars believe were dating back to late 1980's. A company of Russian Institutions, including Russian Space Institute (Russian Federal Space Agency)[8] supplied comprehensive information in the form of blueprints and transportable nuclear assets in order to encourage Iran into becoming a self-capable nuclear and missile state.

Under the aegis of this program, Russia would support Tehran's missile and uranium enrichment programme, a project that would not be completed until 2006. After the revolution, Iran found great rejections from the world in terms of finding nuclear cooperation partners, and was forced to develop technology to produce enriched uranium all by itself, since American obvious non-cooperation led to shutting down of the Bushehr plant for years.

AEOI: ATOMIC ENERGY ORGANIZATION OF IRAN

The main and official body of Iran which is responsible for implementing regulations and operating nuclear energy installations in Iran is called Atomic Energy Organization of Iran. It is headquartered in northern Amir Abad district in Tehran, but has facilities throughout the country. The organization is currently headed by Fereydoon Abbasi[9], after previous head Ali Akbar Salehi became Foreign Minister in January 2011.

It has the following subdivisions;

Nuclear Fuel Production Division (NFPD): Research and development on the nuclear fuel cycle, including uranium exploration, mining, milling, conversion, and nuclear waste

[8] http://www.federalspace.ru/ (The website provides comprehensive information about Persepolis from the Russian viewpoint)

[9] Iranian Entity listed in an annex to U.N. Security Council Resolution 1747 of March 24, 2007 as an entity involved in Iran's secret nuclear and ballistic missiles activity.

management; departments include Jaber Ibn Hayan Research Dept., Exploration and Mining Dept., Benefication and Hydrometallurgical Research Center, Nuclear Fuel Research and Production Center, Waste Management Dept., and Saghand Mining Dept.

Nuclear Power Plant Division (NPPD): Responsible for planning, construction, commissioning, decommissioning and nuclear safety of nuclear power plants in Iran.

Engineering and Technical Supervision Department (ETSD): Design, review, evaluation and approval of engineering and technical documents, participation and quality control.

Research Division: Responsible for planning and guiding research projects; has eight affiliated research centers: Nuclear Research Center, Research Center for Lasers and their Application; Nuclear Fusion Research Center, Gamma Irradiation Center, Center for Renewable Energy Development, Nuclear Research Center for Agriculture and Medicine (Karaj), Yazd Radiation Processing Center, and Bonab Research Center.[10]

International Affairs Department (IAD): Oversees cooperation with AEOI counterparts abroad and drafts documents on AEOI policies; maintains a delegation at the IAEA in Vienna, Austria and one in Moscow, Russia.

MAJOR NUCLEAR FACILITIES IN IRAN

Iran since the beginning of its nuclear programme has expanded to more than 12 known nuclear facilities, differently

---

[10] Bonab Research Center: Listed by the European Union on May 23, 2011 as an entity linked to Iran's proliferation-sensitive nuclear activities or Iran's development of nuclear weapon delivery systems; with some exceptions, European Union member states must freeze all funds and economic resources owned, held or controlled by the listed entity, and prevent funds or economic resources from being made available to it; affiliated with the Atomic Energy Organization of Iran (AEOI - see separate entity record); overseen by the Nuclear Science and Technology Research Institute (NSTRI - see separate entity record). Composed of three departments: the Applied Physics Department, the Optic and Coating Department, and the Executive Department; the research activities carried out in the Department of Applied Physics include design and construction of the Argon Ion Laser, production of thyratons, research on output power stabilization of the Argon Ion Laser, advanced welding of metals and non-metals, and development of ceramic welding used in Geiger detectors and temperature sensors; manufactures high-capacity voltage switches; conducts research on production of high purity graphite; inaugurated in 1989.

for research, enrichment and staff-work. With the help of such nations as Argentina and Russian Federation, at least three of the nuclear facilities present in Iran are of significant importance in terms of nuclear capability to both develop and maintain nuclear weapons.

Iran Watch illustrating Iran's nuclear facilities.[11]

Bushehr Nuclear Facility

Bushehr is the first civilian nuclear plant that was ever built in Middle East, and is recognized for various reasons, among them the political machinations involving its constructions and the ripples that it created across the world. The work on the plant was started in 1975 but was delayed for several years facing international disagreement after the revolution, financial and technical challenges and environmental concerns since it was a coast-line nuclear power plant. Gradually, in early 1980's, Russian government collaborated extensively with Iran to set up the plant, and one of Russia's leading nuclear export companies *Atomstroyexport*[12] was given the main contract for finishing the plant.

---

[11] Source: Federation of American Scientists; https://www.fas.org/ (Retrieved 26 January 2013)

[12] Official Website of AtomstroyExport; http://www.atomstroyexport.com/about/rus/1 (Retrieved 27 January 2013)

In August 2012, the plant operated at 100 per cent capacity for the first time, and with positive results.

Bushehr nuclear plant has also been a source of safety and environmental concerns, and Iran-Russia has been alleged for their neglect towards safety. Center for Energy and Security Studies, a Moscow-based independent think tank, explained the construction delays of the plant as partly due to a "shortage of skilled Russian engineering and construction specialists with suitable experience". It also spoke of "frequent problems with quality and deadlines". Aging equipment at the plant has also been a problem and, in February 2011, a 30-year-old German cooling pump broke, sending metal debris into the system. In 2010, the IAEA noted that the facility was understaffed.[13]

It is notable that such safety concerns are even more alarming because Bushehr is closer to six Arab capitals than it is to Tehran itself, and also falls under a very high seismic hazard zone.

Fordow Nuclear Facility

Fordow nuclear plant is a highly secretive, undisclosed and supposed nuclear facility in Iran which is capable of nuclear enrichment of Uranium, possibly more than 5 per cent. Iran disclosed the existence of Fordow Nuclear Facility as an unfinished Fordow Fuel Enrichment Plant (FFEP) to IAEA on 21 September 2009, claiming that under IAEA safeguards agreement, it only needs to disclose the existence of a nuclear facility 180 days before the nuclear material is received by the facility. Iran was met with world-wide criticism, with the wagon led by United States of America claiming that it's intelligence has known of such a nuclear facility near the city of Qom, an underground research facility at the base of former Iranian Revolutionary Guards Corps.

Fordow Nuclear Facility has been a subject of debate on ambiguity of Iran's nuclear program and ease of weaponization that a rogue state[14] may obtain due to such ambiguity. On 25 January 2013, satellite imagery and former Iranian intelligence officers have suggested that there was a huge blast in the centrifuge of the plant, and it has been incapacitated. These reports are premature and unconfirmed and Iran has not taken any stance on the issue.

---

[13] Tom Hamburger (27 February 2011). "Iran reports safety concerns at nuclear plant". LA Times; http://articles.latimes.com/2011/feb/27/world/la-fg-iran-nukes-20110227 (Retrieved 27 January 2013)

[14] It must be noted that IAEA discourages the use of this term.

Reports have suggested the following;

> According to a source in the security forces protecting Fordow, an explosion rocked the site that is buried about 300 ft. deep under a mountain. The blast, which shook facilities within a three-mile radius, occurred at the third centrifuge chamber with the high-grade enriched uranium reserves below them.
>
> Security forces enforced a no-traffic radius of 15 miles, and the Tehran-Qom highway shut down for several hours after the blast. The site's two elevators are out of commission, and as of Wednesday afternoon, rescue workers had failed to reach trapped personnel.
>
> Allegedly, the information was passed on to U.S. officials, but it has not been verified or denied by the regime or other sources within the regime. President Mahmoud Ahmadinejad called an urgent meeting Tuesday with the head of Iran's Atomic Energy Organization and other officials.
>
> *26 January 2013; Source: Jewish Daily*

Iranian government, as on the date of writing (27 January 2013) has given no statement on this issue and has signalled that Fordow nuclear facility is functioning under normal conditions. United States of America has threatened to destroy any unrevealed nuclear facility bearing a degree of ambiguity, using Massive Ordnance Penetrators that are capable of penetrating 20 meters of rock before exploding.

Parchin Nuclear Facility

Parchin is an Iranian military complex, primarily used for military and space research, and is a significant facility for both nuclear weapons and ballistic missile research. IAEA has believed in a considerable change of the nature of the Parchin Nuclear Facility.

When IAEA was granted its first access to Parchin military complex in November 2005, it found out that there was no nuclear material[15] and the complex was only used for conventional weapons and missile testing. However, later in 2011, IAEA claimed that it has enough credible evidence to prove that Parchin is now involved in nuclear weapons testing and has been doing *'implosion'* testing. Iran did not grant IAEA any permission to enter the facility since then, and it has

[15] Additional Suggested Reading;
http://www.isisnucleariran.org/sites/detail/parchin/ (Retrieved 27 January 2013)

increased both international criticism and fear that Iran has a comprehensive nuclear weapons program.[16] [17]

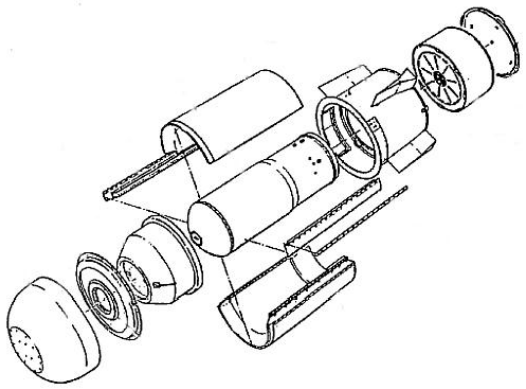

ALLEGATIONS /POSSIBILITIES OF WEAPONIZATION[18]

Iran has been installing and testing centrifuge cascades at two plants. As of November 17, 2008, the total amount of uranium *hexafl uoride (UF6)* fed into the cascades at the Fuel Enrichment Plant (FEP) since the beginning of operations was 9,956 kg, and a total of 839 kg of low enriched uranium *hexafl uoride* had been produced; between November 18, 2008, and January 31, 2009, Iran produced a further 171 kg of low-enriched uranium (LEU), giving a total production of 1,010 kg of LEU. These figures make it difficult to deny that Iran is at an easy access of turning its peaceful nuclear programme into a frightening weapons program, or has probably even done so, since LEU can be further enriched into HEU very easily.

In 1974, India's test of *Smiling Buddha* made the world aware of an unpredictable and impulsive nature of the nuclear assets present in the country and the ease of use with which these assets can be turned toward weapons due to its dual-use[19] nature. Since then, the world community has become

---

[16] "IAEA Expert Team Returns from Iran". Press Release 2012/05. International Atomic Energy Agency. 22 February 2012. Retrieved 23 February 2012; http://www.iaea.org/newscenter/pressreleases/2012/prn201205.html (Retrieved 27 January 2013)

[17] Another major fuel enrichment plant within Iran is *Natanz* fuel enrichment plant which is deliberately excluded from this document. Additional Suggested Reading: Institute for Science and International Security; http://www.isisnucleariran.org/assets/pdf/Iran_IAEA_Report_Analysis_5June2009.pdf (Retrieved 27 January 2013)

[18] Cite: East West Institute, A Threat Assesment: Iran's Nuclear and Missile Potential

[19] Dual Use Technology refers to that technology which can be interchangeably used for peaceful and weapons purposes.

increasingly vigilant towards nuclear activities, and international intelligence gathering supplied to IAEA clearly indicate the interest the world has in Iran's ambiguous nuclear programme.

Iran denies that it has a nuclear weapons program: "the Islamic Republic of Iran has not had and shall not have any nuclear weapons program," it told the IAEA in May 2008.[20] Iran has rejected the evidence presented to it by the IAEA about alleged military-related research. It claims that the evidence provided by the IAEA does not show that Iran has been working on — or has worked on in the past — *a nuclear weapon.*

The evidence presented to the Iranian government by the IAEA about alleged military-related research has been based on intelligence received from IAEA member states about work at Iranian research and military organizations pointing to a possible nuclear weapons program. Among these activities are studies of high explosives (HE); conversion of uranium dioxide into uranium tetrafl uoride (which might indicate work on the preparation of uranium metal for a bomb); testing of high-voltage equipment for activation of HE detonators and devices for simultaneous activation of several detonators; development of guidelines for assembling and operating a detonation system; plans for the organization of underground tests; testing of a multipoint system for initiation of an HE unit of hemispheric shape; biographical data showing the involvement of an Iranian expert in calculations of the radius of a nuclear explosion ball using the Taylor-Sedov equation[21], etc.

It is notable here that such calculations are only required when nuclear fuel has to be used for the production of weapons or a nuclear bomb. From the aspect of research, the intelligence suggest that Iran has been absorbed with researching on turning Uranium into weapons, however Iran has constantly denied this claim. Iran has denied engaging in most of these activities, and where it has admitted some of them — such as work on high explosives — it has claimed that these were undertaken in the context of work on nuclear power or conventional weapons. Because of restrictions imposed by member governments, the IAEA has not been able to make available to Iran most of the documents that form the basis for the claims that Iran has been engaged in weaponization and military-related research; nor

---

[20] IAEA Board of Governors, "Implementation of the NPT Safeguards Agreement," IAEA: GOV/2008/15, 4, http://www.iaea.org/Publications/Documents/Board/2008/gov2008-15.pdf (Retrieved 27 January 2013)

[21] Taylor-Sedov equation is useful in understanding the blast radius and is used primarily in designing bombs both conventional and nuclear.

has it made the documents accessible to experts from other countries who could evaluate their authenticity and reliability.

The Iranian government has not provided satisfactory answers to the questions raised about possible military dimensions of the Iranian nuclear program. In November 2008 the IAEA reported that it had made no progress with Iran in resolving the issues it had raised about possible military dimensions of the Iranian program. Although it is evident that Iran has taken the decision to develop the full nuclear fuel cycle, it is not clear whether it has taken the decision to produce nuclear weapons.[22]

CRITICAL ASSESSMENT OF IRAN'S NUCLEAR POTENTIAL

Even as said, the path to a nuclear bomb is not an easy one under such strict monitoring and specialist attention by IAEA and intelligence scrutiny by all nations of the world. It has been suggested by recent research that to make a nuclear bomb, Iran will have to let go, entirely of IAEA cooperation and build a secretive facility to develop nuclear weapons entirely on their own through the means of expertise gained from civilian nuclear programme.

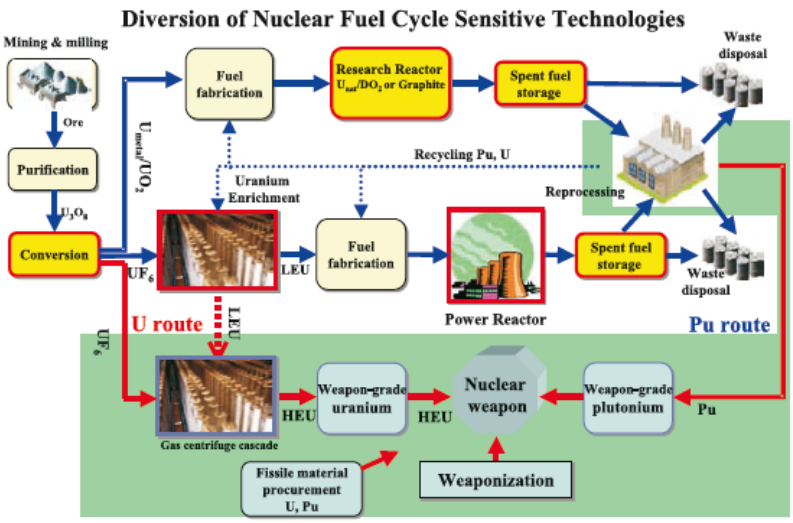

Iran has the raw materials, equipment, technologies, and qualified staff to produce fuel based on uranium-235 enriched up to around five per cent for use in nuclear power reactors. Recent reports suggest, however, that Iran's supply of uranium is declining, and this may pose problems for Iranian plans to develop nuclear power.

---

[22] Development of nuclear weapons and a full nuclear fuel enrichment cycle are two different things even when both can mean up to 20 per cent nuclear enrichment of Uranium or equivalent nuclear fuel because weaponization also involves fluoride separation.

Iran's Nuclear Push

Although Iran is doing research in most stages of nuclear development, each step has had problems.

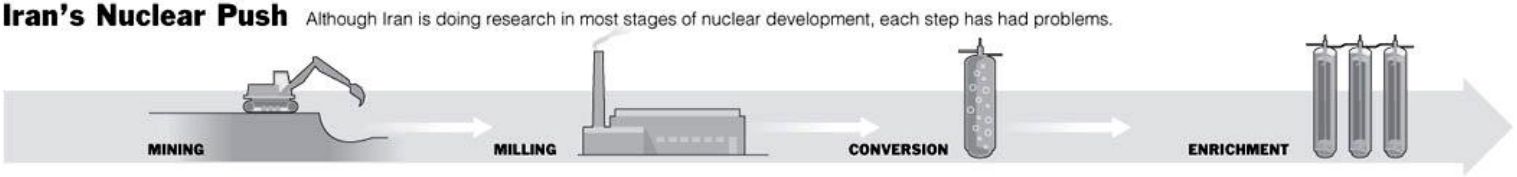

NUCLEAR BOMB
Iran denies having a nuclear bomb program.

NUCLEAR FUEL
Fluorine is removed to produce fuel for reactors.

	MINING	MILLING	CONVERSION	ENRICHMENT	NUCLEAR BOMB / NUCLEAR FUEL
STAGE	Uranium ore rock is mined from natural deposits in the earth.	The rocks are crushed and bathed in acid to separate the uranium, which is dried into a powder called yellowcake.	Yellowcake is combined with fluorine and other chemicals to form uranium hexaflouride.	Arrays of centrifuges spin the gas to increase uranium 235.	
IRAN'S PROGRESS	 *Iran has the capacity to produce 70 to 80 tons of uranium annually.*	 *Two uranium mills are planned to process Iran's ore.*	 *Iran has been able to produce 85 metric tons of the material.*	 *Iran is in the early stages and has conducted prototype tests.*	 *The nuclear power plants are under construction.*
PROBLEMS	The cost is high because the ore is often deep below the surface and has low uranium content.	The ore contains other elements that can contaminate later processes.	Iran is trying to reduce the impurities; contamination threatens the centrifuges.	Iran needs to repair broken centrifuges and learn to mass produce them.	Iran has no plants yet to produce nuclear fuel.

Sources: International Atomic Energy Agency; International Institute for Strategic Studies

Further development of the centrifuge enrichment technology and further equipment build-up would enhance Iran's capacity to produce not only LEU, but also weapon-grade highly enriched uranium (HEU) with enrichment to ninety per cent and more. It has taken Iran about a year to accumulate enough LEU to produce sufficient HEU for a bomb. Future rates of production will be determined by the number of cascades Iran builds and by the introduction of new types of centrifuges.[23]

Although the possibility cannot be discounted entirely, there is no basis for assuming either that Iran has already accumulated — and is secretly storing — weapon-grade fissile material or that it has undeclared LEU in the form suitable for further enrichment or in the amount needed for obtaining significant quantities of uranium-235. Radioisotope measurements that were performed by the IAEA inspectors have not revealed unexplained traces of U-235 or Pu-239 at the locations they have examined.

Iran has acquired technologies not only from Pakistan but also from several European countries in contravention of export control regulations, and Iran could receive external help again in the future. This shows how important it is for nuclear suppliers to take joint measures to tighten control over the export of dual-use technologies, including more efficient exchange of intelligence data on attempts by non-nuclear countries to acquire illegally sensitive technologies and equipment.

There is no denying that Iran has the scientific and technical potential[24] to develop nuclear weapons, but this critical assessment outlines the following ambiguities;

- Iranian Intent to develop nuclear weapons, and the division of that intent.

- Insufficiency of data to understand Iranian potential to develop a thermonuclear weapon – a Hydrogen Bomb.

On this note, East-West Institute's report (refer to note#18) outlines the following observation, but the backbone of such a deliberation is open to discussion;

---

[23] IAEA Board of Governors, "Implementation of the NPT Safeguards Agreement," IAEA: GOV/2009/8, 4, http://www.iaea.org/Publications/Documents/Board/2009/gov2009-8.pdf (Retrieved 27 January 2013)

[24] Additional Suggested Reading: http://www.carnegieendowment.org/static/npp/Iran_fact_sheet.pdf (Retrieved 27 January 2013)

> It could take Iran perhaps five years — and additional nuclear tests — to move from the first test of a simple nuclear device to the development of a nuclear bomb or warhead with a yield of several tens of kilotons capable of being fitted onto existing and future Iranian ballistic missiles.
>
> Such a warhead would most likely weigh more than 1,000 kg, unless substantial help were obtained from abroad in the design and development of the warhead.
>
> The technological challenges lie not only in the design of the nuclear charge, but in the design and engineering of the warhead as well.

It is very critical to note that there is no seismic or radiation-monitoring data to indicate that nuclear tests have taken place in Iran, and Iranian claim to have not started the development of nuclear weapons is backed by facts where western claims of Iran's weapon-intent is backed by hypothesis and intelligence findings that the world is unwilling to share.

At the same time, it can be concluded through Iran's current scientific know-how and nuclear assets that it can create a weapon in less than three years, but logically, not to conclude that it has taken the decision to do so.

INTERNATIONAL THREAT RESPONSE TO IRANIAN NUCLEAR PROGRAMME AND ALLEGED WEAPONIZATION

International threat response to the Iranian nuclear programme, and especially the ambiguity attached to it was definitely divided between countries, with the United States of America and Israel reserving the most censuring statements, and variably advanced threat responses systems. Diplomatic talks have been failed and/or delayed and the importance of international threat response has become even more.[25]

United States of America is credited with operating the world's most advanced anti-missile grid system and the most readily scrambled deployment of Anti-aircraft systems. Iran's threat of WMDs has been a matter of central concern for the United States of America for many reasons, and it is safe to assume that Iran can only deliver a nuclear weapon to United States of America via the means of a ballistic missile or an aircraft.[26]

---

[25] Reuters, United States – Iran talks further delayed. http://www.reuters.com/article/2013/01/25/us-iran-nuclear-idUSBRE90O0WQ20130125 (Retrieved 27 January 2013)

[26] American threat response from Iran is further taken ahead in section 3.b of this document entitled; International Threat Response to Iranian Ballistic Missile Programme.

President Barack Obama has clearly indicated that America will consider raiding Iranian nuclear assets by all means if Iranian reluctance to disclose information continues.[27] It is also safe to assume that Israel enjoys vital U.S. support, and nuclear safety from Iran to some theoretical degree.

[27] Additional Suggested Reading: http://www.uspolicy.be/headline/states-burns-us-middle-east-policy (Retrieved 27 January 2013)

~3~

Iran's Ballistic Missile Programme

Iran's missile programme is very comprehensive and is unprecedentedly advanced. The origins of the Iranian ballistic missile program go back to the Iran-Iraq war, in the course of which Iraq launched a large number of SCUD missiles against Iran. Iran has made considerable efforts to acquire ballistic missiles and related technologies from foreign sources and has started an ambitious indigenous missile program of its own.

Most of these indigenously made ballistic missile systems, the Shahab-1, Shahab-2, Shahab-3 and the Ghadr-1 Kavoshgar (sometimes alternatively called the Shahab-3M) are liquid-propelled having an estimated range of 300-1100 kilometres, therefore belonging to the category of Short Range Ballistic Missile systems.

When understanding missile systems and their ranges, the concept of *range-payload trade-off* is of critical importance. This means that one or more of these missiles' payload could be reduced for increasing their range by more than 80 per cent. These are all single-stage missiles. Iran has also developed the liquid-propellant two-stage *Safir* space launch vehicle (SLV), which was used to put the Omid satellite into space on February 2, 2009.[28]

[28] Space Launch Report; Datasheet: Safir; http://www.spacelaunchreport.com/safir.html (Retrieved 27 January 2013)

Safir is an Iranian Space Launch Vehicle that could be used to carry nuclear payload by the means of dual-use goods and technology.

There are reports that Iran has developed solid propellant missiles with a range of 2,000 km. There is, however, no reliable information at present on the state of Iran's efforts to develop solid-propellant rocket motors and therefore no basis on which to make an assessment in this report.

It has been suggested that Iran's missiles are now capable of reaching Europe, an alarming and seriously critical proliferation threat. These missiles can carry nuclear payload too.[29]

TECHNICAL BACKGROUND

Iran's technical expertise in the field of missile development is not questionable and historically from the Iran-Iraq war, the development of Scud missiles and re-integration of them into the Iranian missile arsenal bears proof to the skill and expertise of Iranian scientists. Iran's efforts to increase the range and payload of its ballistic missiles beyond that of the Shahab-3 take advantage of the higher thrust of the Nodong[30] rocket motor.

Since the Nodong rocket motor has sufficient excess thrust to lift missiles that are heavier than the original Nodong, Iran has followed a strategy of gradually increasing the length of the fuel and oxidizer tanks of the original Nodong so that it can carry more propellant.

---

[29] Council on Foreign Relations; http://www.cfr.org/iran/irans-ballistic-missile-program/p20425 (Retrieved 27 January 2013)

[30] Nodong Missile (alternatively spelled as Rodong-1 in North Korea) is North Korean missile system. Additional suggested reading: http://cns.miis.edu/stories/pdfs/060321.pdf (Retrieved 27 January 2013)

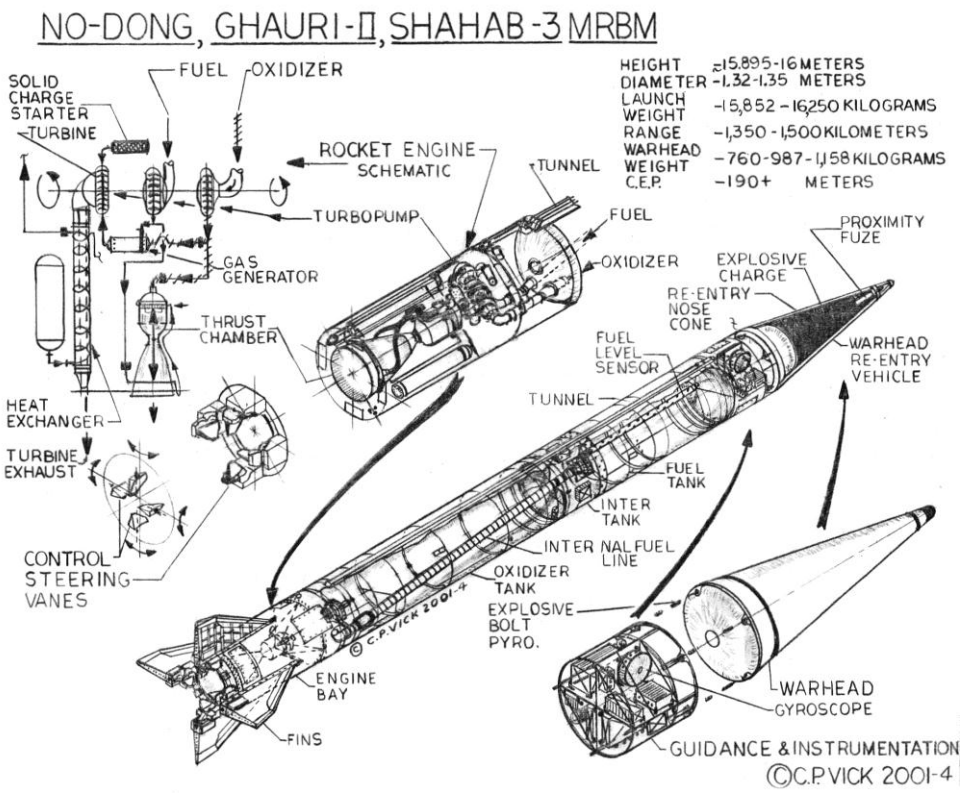

A diagrammatic representation of the nuclear capable Shahab-3

Complexity of Iranian Missile Program[31]

Defense analysts say despite Iran's public pronouncements and frequently publicized test firings, assessments of Iranian hardware are largely speculative. Indeed, many Western reports offer contradictory findings, with different missile names, ranges, inventory numbers, and other characteristics for even the most commonly cited systems. The Federation of American Scientists, an advocacy group that promotes disarmament, for instance, estimates the maximum range of the liquid-fuelled workhorse of the Iranian arsenal, the Shahab-3 medium-range missile, at 1,500 kilometres, while Missilethreat.com, a project of the conservative Claremont Institute, puts the maximum range at 2,500 kilometres. But beyond technical characteristics, experts are in general agreement on trends, especially regarding Iran's short- and medium-range systems. In November 2008, Iran allegedly tested a new multistage solid-fuel missile, the Sajjil. Unlike the Shahab, its liquid-fuelled predecessor, the Sajjil is easily transported[32] and quickly readied for firing; it can be readied in minutes versus hours.

---

[31] Citation: Refer Note # 29.

[32] Ballistic Missiles are often fired using Transporter Erector Launcher vehicles (TELs) from land. Some ballistic missiles are also submarine capable but Iran does not possess any such missiles.

Short-range Ballistic Missiles (up to 1,000 kilometers): Iran's short-range arsenal includes the Fateh-110 and the Shahab-2 (also called the Scud-C), which Iran is believed to have purchased from North Korea (AP) in the 1990s. A third short-range missile, the CSS-8, is believed to have been acquired from China.[33] All of Iran's short-range missiles can be transported on mobile launchers, though the U.S. Air Force's National Air and Space Intelligence Center estimates Iran has less than one hundred (PDF) short-range delivery systems.

Medium- and Intermediate-range Ballistic Missiles (between 1,000 to 5,500 kilometers): Before unveiling the Sajjil, Iran's primary medium-range missile was the Shahab-3 (FAS) and its several variants. The Shahab-3b has an estimated range of 2,500 kilometers, putting within range Israel, Turkey, and U.S. military bases in the Middle East. Testing of the Sajjil was seen as an important step forward in Iranian capabilities, principally the use of solid propellant technology.

Intercontinental Ballistic Missiles (ICBM) (more than 5,500 kilometers): Analysts are divided over Iran's long-range, or ICBM, ambitions. Hildreth of the Congressional Research Service says that in general, U.S. intelligence assessments are pushing the threat of an Iranian ICBM "further out in the decade," reflected in President Obama's decision to focus missile defense attention on Iran's short- and medium-range threats. In May 2009, a joint U.S.-Russia assessment by the EastWest Institute estimated Iran is six to eight years away from producing a ballistic missile capable of delivering a 1,000 kilogram nuclear warhead to a range of 2,000 kilometers.

But while organizations such as the Federation of American Scientists conclude that Iran began developing a long-range missile in the mid-1990s (the so-called Shahab-6)[34], Hildreth and others say there is considerable doubt as to whether these programs remain active. An assessment of global ballistic missile threats produced by the U.S. Air Force's National Air and Space Intelligence Center offers no specifics on an Iranian ICBM program, and only notes that the successful Safir multistage space launch "can serve as a test bed for long-range ballistic missile technologies."

---

[33] Additional Suggested Reading; http://www.missilethreat.com/missilesoftheworld/id.30/missile_detail.asp (Retrieved 27 June 2013)

[34] Robert Schumacher; "3rd World Missile Development - A New Assessment Based on UNSCOM Field Experience and Data Evaluation," paper for the 12th Multinational Conference on Theater Missile Defense: Responding to an Escalating Threat, June 1-4, Edinburgh, Scotland.

Technical Restrictions for Missile Development

The major scientific, technological and production problems that have to be solved in building an IRBM or an ICBM are as follows:

- The development of powerful rocket motors;
- Flight control, guidance systems, and telemetry;
- Reentry vehicle heat protection;
- Construction materials;
- Flight testing.

Each of these areas would pose major scientific, technological, and production problems for Iran.

Unlike Russia and the United States, Iran does not have the infrastructure of research institutions, industrial plants, or the scientists and engineers that are needed to make substantial improvements in the basic rocket components it has used from the start. To give a very basic instance, Chinese missile sector involves more than 200,000 employees and has taken years of development to structure its very modest missile system. It would be one of Iran's greatest difficulties to develop missile systems quickly and effectively for sustained conflicts with missile powers like United States, Russia, Britain, France or India.

INTERNATIONAL THREAT RESPONSE TO IRANIAN BALLISTIC MISSILE PROGRAMME

Iranian ballistic missile systems and the ambiguity of information related to both its nuclear and missile programmes has led to significant international threat response systems' deployment.[35]

Missile Technology Control Regime

The MTCR (Missile Technology Control Regime) is the only international policy to attempt to limit the proliferation of missiles capable of delivering weapons of mass destruction. It consists of an export-control policy and associated arrangements between member governments (there are 34 export countries part of this policy group).

---

[35] For the purpose of linearity and preventing excess of information, this document focuses primarily on missile programme of Iran and not United States', Russian or European anti-missile systems including X-Radars and UHR systems. You can read more about AEGIS, THAAD and such similar missile grids and defence systems online. It is important to be reminded that this area is outside the interest of IAEA as missiles are equally capable of carrying conventional non-nuclear payload.

Since its establishment, the MTCR has been successful in helping to slow or stop several ballistic missile programs, according to the Arms Control Association: "Argentina, Egypt, and Iraq abandoned their joint Condor II ballistic missile program. Brazil, South Africa, South Korea, and Taiwan also shelved or eliminated missile or space launch vehicle programs.[36]

Hague Code of Conduct against Ballistic Missile Proliferation

Hague Code of Conduct against Ballistic Missile Proliferation is the most effective and transparent regime to have come out in years to combat the aggressive proliferation policy of nations regarding ballistic missile development. The Hague Code of Conduct against Ballistic Missile Proliferation (HCOC) was formally brought into effect on November 25, 2002, at a Launching Conference hosted by the Netherlands at The Hague.

As of October 2011, 134 countries have subscribed to the HCOC.[37] It is comprehensive, and there is no denying that it is a dedicated effort of the enforced actions of the international community to internationally regulate the area of ballistic missiles which could be capable of carrying weapons of mass destruction. The HCoC is the only multilateral code in the area of disarmament adopted over the last years. It is also the only transparency instrument concerning the spread of ballistic missiles.

IRANIAN SPACE PROGRAMME

Iran used the liquid-propellant Safi r space launch vehicle (SLV) to send the Omid earth satellite into low earth orbit. By launching an earth satellite, Iran has demonstrated that it can exploit low thrust rocket motors to build a two-stage rocket, and that it has qualified engineers who are able to make good use of the technology that is available to them. It does not show, however, that Iran has made a fundamental technological breakthrough.[38] [39]

---

[36] "The Missile Technology Control Regime at a Glance". Arms Control Association. Retrieved 2010-06-11; http://www.armscontrol.org/factsheets/mtcr (Accessed 18 Sep. 12)

[37] United Nations General Assembly, 62nd Session Report on Complete Disarmament; http://www.hcoc.at/documents/un63389-en.pdf

[38] Additional Suggested Reading: p12, Defence Against Iranian Ballistic Missiles, East West Institute Report (refer note #18)

[39] Additional Suggested Reading: Congressional Research Service Report: http://www.fas.org/sgp/crs/nuke/R42849.pdf (Retrieved 27 January 2013)

~4~

Response to Iranian Nuclear Programme

Iran's nuclear policy has received varying degree of attention and very different nature of responses from various countries in the world, so much so that this subject has become a defining characteristic in understanding international policy-making. The following are the two very critical responses behaviour to the Iranian nuclear programme;

THE BAKU DECLARATION

Baku declaration refers to the Arab stance against Iranian nuclear programme. A declaration signed on 20 June 2006 by the foreign ministers of 56 nations of the 57-member Organisation of the Islamic Conference stated:

> "the only way to resolve Iran's nuclear issue is to resume negotiations without any preconditions and to enhance co-operation with the involvement of all relevant parties".

NON-ALIGNED NUCLEAR MOVEMENT [40]

Non Aligned Movement was of the viewpoint that the present situation whereby Nuclear Weapon States monopolise the right to possess nuclear weapons is *"highly discriminatory"*, and they have pushed for steps to accelerate the process of nuclear

---

[40] "XV Ministerial Conference of the Non-Aligned Movement (July 2008): Statement on the Islamic Republic of Iran's Nuclear Issue" (Retrieved 23 November 2011); http://www.iaea.org/Publications/Documents/Infcircs/2008/infcirc733.pdf (Retrieved 27 January 2013)

disarmament. They also form the majority in supporting Iran's claim of not developing nuclear weapons.[41]

CRITICAL DOCUMENTS ON IRAN'S NUCLEAR PROGRAMME Imp

The following are some documents that are of significance in relation to Iran's Nuclear Programme;

IAEA Documents Timeline

Please follow the link.[42]

United Nations Security Council Resolutions

Please follow the link.[43]

Other Related Documents

Please follow the link.[44]

---

[41] Heinrich, Mark (11 September 2007). "Developing states rap "interference" in Iran deal". Reuters. Retrieved 23 November 2011; http://www.reuters.com/article/worldNews/idUSL1154089720070911 (Retrieved 27 January 2013)

[42] http://www.iranwatch.org/international/IAEA/ (Last Accessed 27 January 2013)

[43] http://www.iranwatch.org/international/UNSC/ (Last Accessed 27 January 2013)

[44] http://www.iranwatch.org/international/Treaties/otherinternational.html (Last Accessed 27 January 2013)

Acknowledgments

This document borrows a bulk of its compilation from the United States of America's collaborative research project with Russian Federation, the report of the East-West Institute on Iran's Nuclear and Missile Potential. I am heavily indebted to the meticulous and critical commentary on Iran's nuclear and missile programme written by the team of Philip Coyle and Gregory Chernyavsky in the writing of that document.

I am also thankful to the Congressional Research Service of United States of America for their scrupulous plethora of documentation on Iranian nuclear policy. But I am most obliged to thank S. Nussbaum and G. Benz for their insightful analysis of Iranian nuclear facilities by using the very compelling Object Based Image Analysis and Treaty Verification.

Due to her resourceful commentary on the protracted conflict and proliferation related to Iran's nuclear assets and her particularly insightful and gripping writing on Iran's fast-paced nuclear proliferation post 2000 and the hostile American policy towards Iran in the 21st century, I am compelled to recommend to anyone reading this document, Saira Khan's *'Iran and Nuclear Weapons: Protracted Conflict and Proliferation.'*

Notes

Notes